REVISIONS				
REV	DESCRIPTION	ECO #	DATE	APPROVED
-	INITIAL RELEASE	19-132	10/24/19	T.KUHN

SPECIFICATIONS

ELECTRICAL

FREQUENCY RANGE _____ DC TO 18 GHz

ATTENUATION

0-6 dB _____ ±0.3 dB
7-10, 20 dB _____ ±0.5 dB
11-19, 21-30 dB _____ ±0.75 dB
40 dB _____ ±1.0 dB
50, 60 dB _____ ±2.0 dB
(AVAILABLE IN 1/2 dB VALUES 0.5 - 10.5 dB)

VSWR

DC-4 _____ 1.15:1 MAX
4-12.4 _____ 1.25:1 MAX
12.4-18 _____ 1.35:1 MAX

POWER (AVG) _____ 2 WATTS 0.5 dB AND ABOVE
50 WATTS FOR 0 dB UNIT
DERATED LINEARLY FROM 100% @+25°C TO 10% @ +125°C

POWER (PEAK) _____ 500 WATTS
5 µS PULSE W, 0.05% DUTY CYCLE

IMPEDANCE _____ 50 OHMS

MECHANICAL

OPERATING TEMP RANGE _____ -65 TO +125°C
1.38 LENGTH / WEIGHT MAX _____ 0.40oz. (11.3g)
1.95 LENGTH / WEIGHT MAX _____ 0.60oz. (15.3g)

MATERIAL

OUTER CONDUCTOR _____ STAINLESS STEEL NON MAGNETIC, PASSIVATED FINISH.

CENTER CONDUCTOR _____ BERYLLIUM COPPER, GOLD PLATED FINISH.

DIELECTRIC _____ TEFLON.

MATERIALS & FINISHES TYPICALLY PER MIL-PRF-39012

MARKING

PART LOOKS LIKE PRODUCT IMAGE ABOVE.
PART MARKING ORIENTATION AND FORMAT AS SHOWN.
MARKING TO BE AS LARGE AS POSSIBLE, CLEAR, READABLE, AND A BLACK COLOR.
YYWW EQUALS DATECODE.

PLUG JACK	dB VALUE	PLUG JACK	dB VALUE
2081-6191-00	0.0	2081-6193-10	10.0
2081-6197-00	0.5	2081-6199-10	10.5
2081-6191-01	1.0	2081-6194-11	11.0
2081-6197-01	1.5	2081-6194-12	12.0
2081-6191-02	2.0	2081-6194-13	13.0
2081-6197-02	2.5	2081-6194-14	14.0
2081-6191-03	3.0	2081-6194-15	15.0
2081-6197-03	3.5	2081-6194-16	16.0
2081-6192-04	4.0	2081-6194-17	17.0
2081-6198-04	4.5	2081-6194-18	18.0
2081-6192-05	5.0	2081-6194-19	19.0
2081-6198-05	5.5	2081-6194-20	20.0
2081-6192-06	6.0	2081-6195-30	30.0
2081-6198-06	6.5	2081-6196-40	40.0
2081-6193-07	7.0	2081-6196-50	50.0
2081-6199-07	7.5	2081-6196-60	60.0
2081-6193-08	8.0		
2081-6199-08	8.5		
2081-6193-09	9.0		
2081-6199-09	9.5		

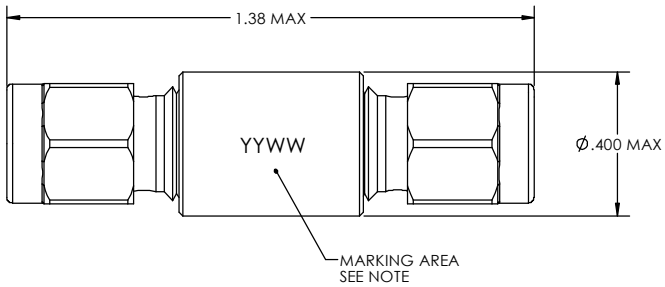

0 THRU 30 dB

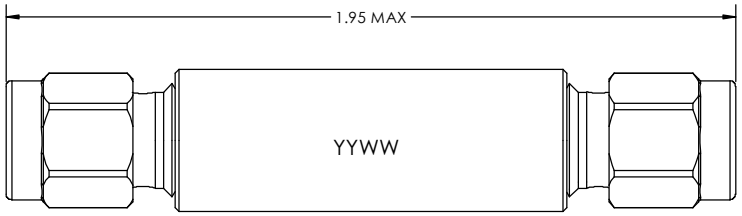

40, 50, & 60 dB

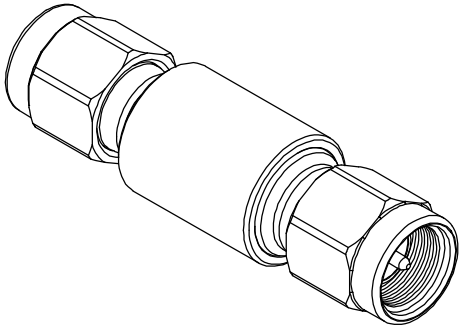

QTY.	PART NUMBER	DESCRIPTION	ITEM NO.
X	2081-619X-dBU	ATTENUATOR, SMA-m/m, DC-18GHz, 2W, UNMARKED	
1	TA-2081-619X-dBU	ASSY, ATTENUATOR, SMA-m/m, DC-18GHz, 2W, UNMARKED	1

DRAWING PRACTICES PER ANSI-Y-14.5 MIL-STD-100 & 1000
DIMENSIONS ARE IN INCHES AND APPLY BEFORE/AFTER PROCESSING
SURFACE ROUGHNESS mINCHES 63
FINISH: SEE NOTES
MATERIAL: SEE NOTES
NOTE: THIS DRAWING INCORPORATES THIRD ANGLE PROJECTION.
INTERPRET IAW ANSI Y14.5-1982

UNLESS OTHERWISE SPECIFIED TOLERANCES IN:

DECIMALS	INCH	[MM]
.X"	.05"	[1.27]
.XX"	.03"	[.76]
.XXX"	.010"	[.25]

ANGLES ±0°30'
REMOVE ALL BURRS/SHARP W/ BREAK / R OF .003" TO .0005"
UNLESS OTHERWISE NOTED DIAS CONCENTRIC <.003 T.I.R.

DO NOT SCALE PRINT

DRAWN McCORMICK 10/22/19
CHECKED McCORMICK 10/22/19
ENG APPR. T.KUHN 10/22/19

THESE DRAWNGS AND SPECIFICATIONS ARE THE PROPERTY OF XMA CORP. OR OMNI SPECTRA AND SHALL NOT BE REPRODUCED, COPIED NOR USED - IN WHOLE OR IN PART - AS A BASIS FOR THE MANUFACTURE OR SALE OF OTHER ITEMS WITHOUT THE EXPRESS WRITTEN PERMISSION OF XMA CORP.

XMA Omni Spectra
Phone:603-222-2256 Fax:603-222-2259
7 Perimeter Road, Manchester, NH 03101

TITLE: ATTENUATOR, SMA-m/m, DC-18GHz, 2W, UNMARKED

SIZE	CAGE CODE	DRAWING NUMBER	REV
C	3HT76	2081-619X-dBU	-

SCALE | PLATED AREA SQ. IN | SHEET 1 OF 1

TEMPLATE REV. A